1.3 - DIMENSIONS AND HYDRAULIC CONNECTIONS FOR TRIOPREX-N

TRIOPREX-N 65÷85

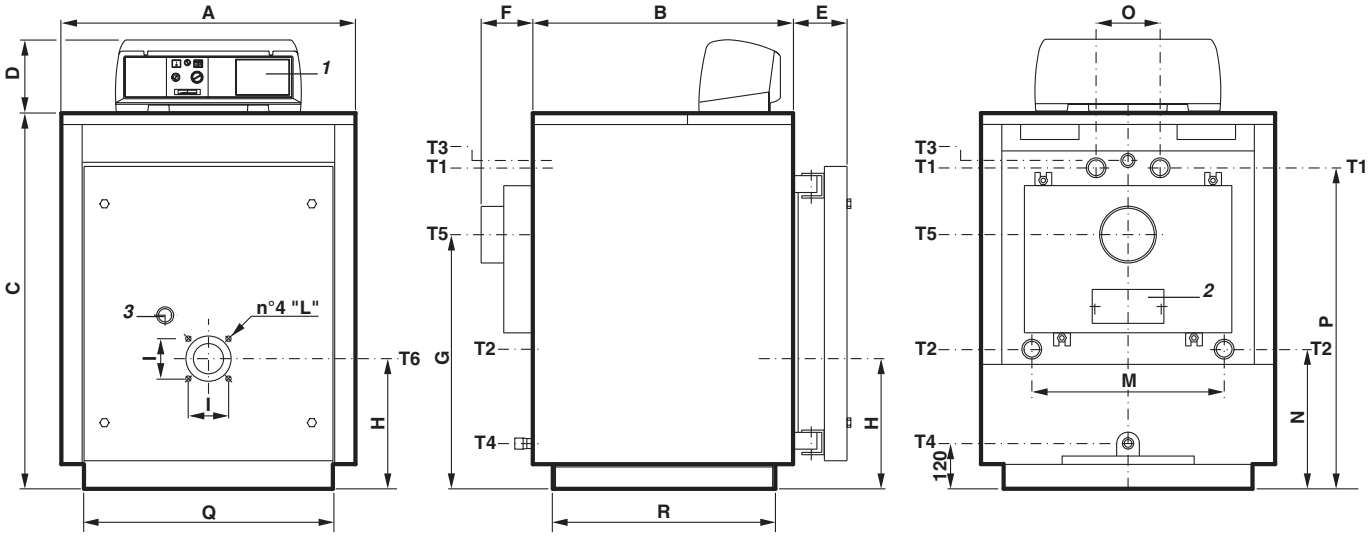

fig. 2

1 Panel board
2 Smoke chamber cleaning door
3 Flame sight glass

T1 C.H. flow
T2 C.H. return
T3 Expansion vessel connection

T4 Boiler drain
T5 Flue connection
T6 Max. burner blast tube dia.

TRIOPREX N	Output min/max	Input min/max	Boiler water content	Water side pressure drop (*)	Smoke side pressure drop	Maximum boiler working pressure	Weight with packaging	CONNECTIONS T1 T2	T3	T4	T5	T6
Type	kW	kW	l	m w.c.	mm w.c.	bar	kg	ISO 7/1	ISO 7/1	ISO 7/1	Ø mm	Ø mm
TX N 65	55÷65	59,8÷71	131	0,04÷0,06	3÷4	5	307	Rp 1½	Rp 1	Rp ¾	150	132
TX N 85	72÷85	78,3÷93	187	0,05÷0,07	4,5÷6	5	348	Rp 1½	Rp 1	Rp ¾	150	132

TRIOPREX N	DIMENSIONS															
Type	A mm	B mm	C mm	D mm	E mm	F mm	G mm	H mm	I mm	L	M mm	N mm	O mm	P mm	Q mm	R mm
TX N 65	740	690	950	190	140	145	660	345	120	M 8	470	310	190	846	**660**	**590**
TX N 85	740	950	950	190	140	145	660	345	120	M 8	470	310	190	846	**660**	**850**

(*) Hydraulic resistance for delta T 15K.

DETAIL FOR DOOR DRILLING
TX N 65 - 85

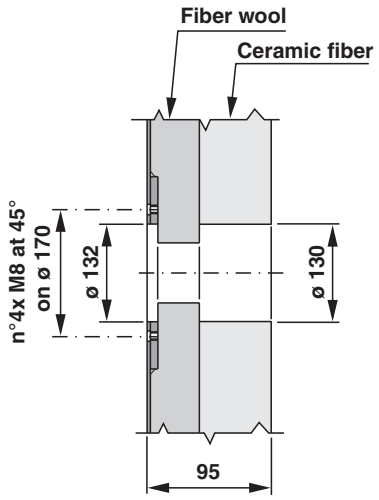

fig. 3

TRIOPREX-N 110÷380

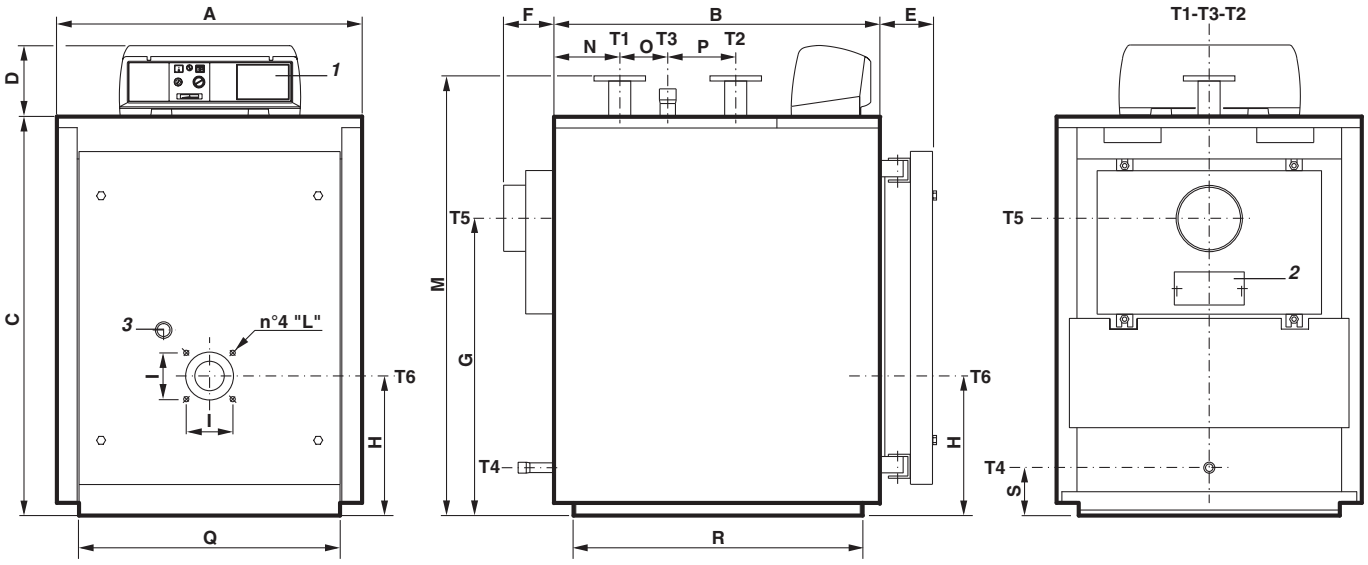

fig. 4

1 Panel board
2 Smoke chamber cleaning door
3 Flame sight glass

T1 C.H. flow
T2 C.H. return
T3 Expansion vessel connection

T4 Boiler drain
T5 Flue connection
T6 Max. burner blast tube dia.

TRIOPREX N	Output min/max	Input min/max	Boiler water content	Water side pressure drop (*)	Smoke side pressure drop	Maximum boiler working pressure	Weight with packaging	CONNECTIONS				
								T1 T2	T3	T4	T5 Ø	T6 Ø
Type	kW	kW	l	m w.c.	mm w.c.	bar	kg	UNI 2278 PN 16	ISO 7/1	ISO 7/1	mm	mm
TX N 110	93÷110	101÷120	204	0,06÷0,08	5,5÷7,5	5	426	DN 50	Rp 1¼	Rp ¾	180	132
TX N 150	127÷150	137,7÷163	270	0,08÷0,10	12÷16	5	503	DN 50	Rp 1¼	Rp ¾	180	132
TX N 185	157÷185	170÷202	285	0,10÷0,18	9÷12	5	564	DN 65	Rp 1½	Rp ¾	180	180
TX N 225	191÷225	207÷245	322	0,17÷0,20	12,5÷17,5	5	621	DN 65	Rp 1½	Rp ¾	180	180
TX N 300	255÷300	276÷327	408	0,22÷0,35	9÷12	5	812	DN 80	Rp 2	Rp ¾	225	180
TX N 380	323÷380	350÷414	475	0,32÷0,53	15÷21	5	906	DN 80	Rp 2	Rp ¾	225	180

TRIOPREX N	DIMENSIONS															
Type	A mm	B mm	C mm	D mm	E mm	F mm	G mm	H mm	I mm	L	M mm	N mm	O mm	P mm	Q mm	R mm
TX N 110	820	885	1082	190	140	145	748	380	120	M 8	**1210**	175	130	185	**710**	**786**
TX N 150	820	1145	1082	190	140	145	748	380	120	M 8	**1210**	175	390	185	**710**	**1046**
TX N 185	860	1080	1182	190	140	145	828	400	--	--	**1310**	215	210	250	**750**	**981**
TX N 225	860	1210	1182	190	140	145	828	400	--	--	**1310**	215	340	250	**750**	**1111**
TX N 300	890	1275	1352	190	140	145	928	440	--	--	**1485**	255	285	315	**780**	**1177**
TX N 380	890	1470	1352	190	140	145	928	440	--	--	**1485**	255	480	315	**780**	**1372**

(*) Hydraulic resistance for delta T 15K.

DETAIL FOR DOOR DRILLING
TX N 110 - 150

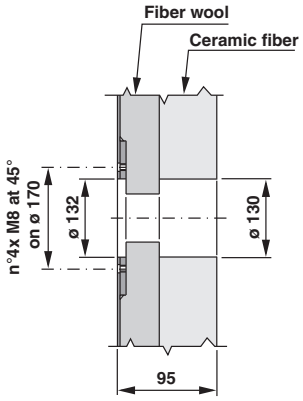

fig. 5

DETAIL FOR DOOR DRILLING
TX N 185 - 225

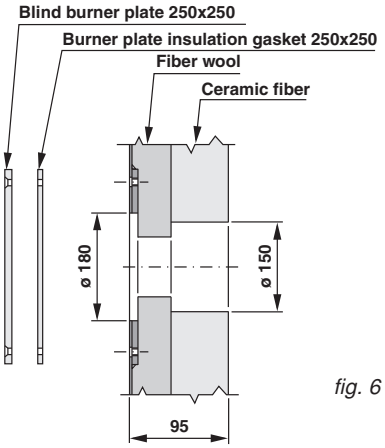

fig. 6

DETAIL FOR DOOR DRILLING
TX N 300 - 380

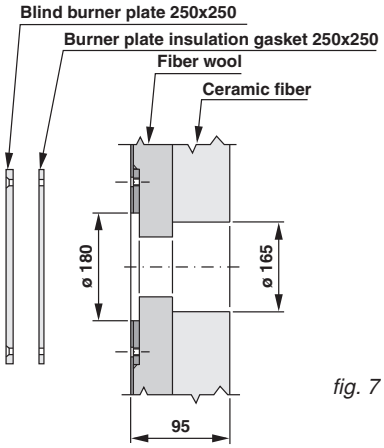

fig. 7

TRIOPREX-N 500÷730

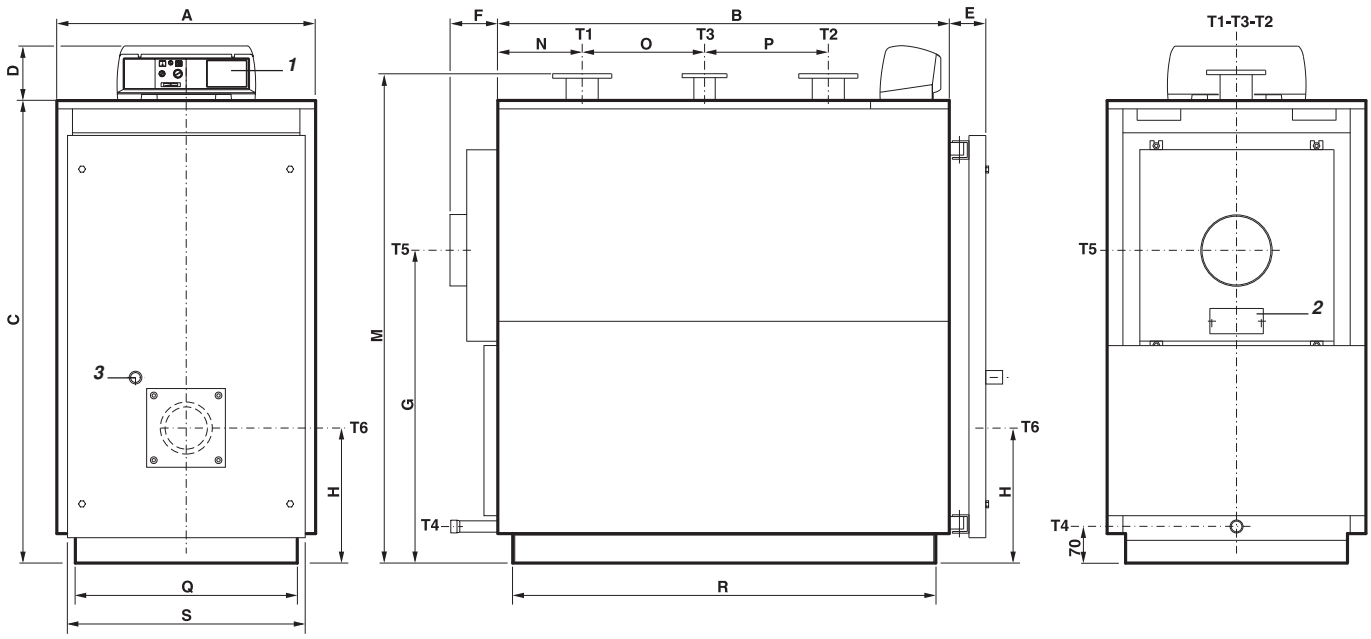

fig. 8

1 Panel board
2 Smoke chamber cleaning door
3 Flame sight glass

T1 C.H. flow
T2 C.H. return
T3 Expansion vessel connection

T4 Boiler drain
T5 Flue connection
T6 Max. burner blast tube dia.

TRIOPREX N	Output min/max	Input min/max	Boiler water content	Water side pressure drop (*)	Smoke side pressure drop	Maximum boiler working pressure	Weight with packaging	CONNECTIONS				
Type	kW	kW	l	m w.c.	mm w.c.	bar	kg	**T1 T2** UNI 2278 PN 16	**T3** UNI 2278 PN 16	**T4** ISO 7/1	**T5** Øi mm	**T6** Ø mm
TX N 500	425÷500	460÷545	656	0,10÷0,15	25÷35	5	1198	DN 100	DN 65	Rp 1	250	220
TX N 630	535÷630	579÷686	737	0,16÷0,23	32÷45	5	1304	DN 100	DN 65	Rp 1	250	220
TX N 730	620÷730	671÷795	807	0,23÷0,33	35÷49	5	1431	DN 100	DN 65	Rp 1	250	220

TRIOPREX N	DIMENSIONS														
Type	**A** mm	**B** mm	**C** mm	**D** mm	**E** mm	**F** mm	**G** mm	**H** mm	**M** mm	**N** mm	**O** mm	**P** mm	**Q** mm	**R** mm	**S** mm
TX N 500	920	1605	1645	190	135	195	1110	480	**1735**	298	435	440	**790**	**1505**	**860**
TX N 630	920	1800	1645	190	135	195	1110	480	**1735**	298	630	440	**790**	**1790**	**860**
TX N 730	920	1995	1645	190	135	195	1110	480	**1735**	298	825	440	**790**	**1895**	**860**

(*) Hydraulic resistance for delta T 15K.

DETAIL FOR DOOR DRILLING
TX N 500 - 730

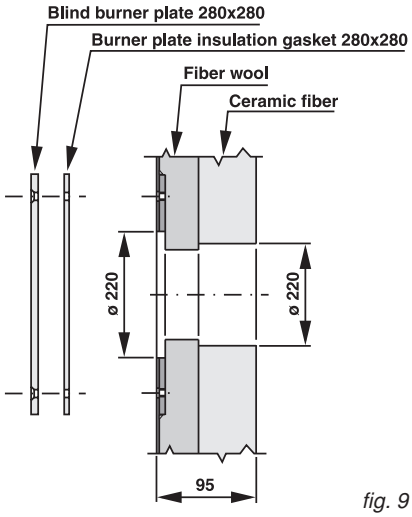

fig. 9

TRIOPREX-N 840

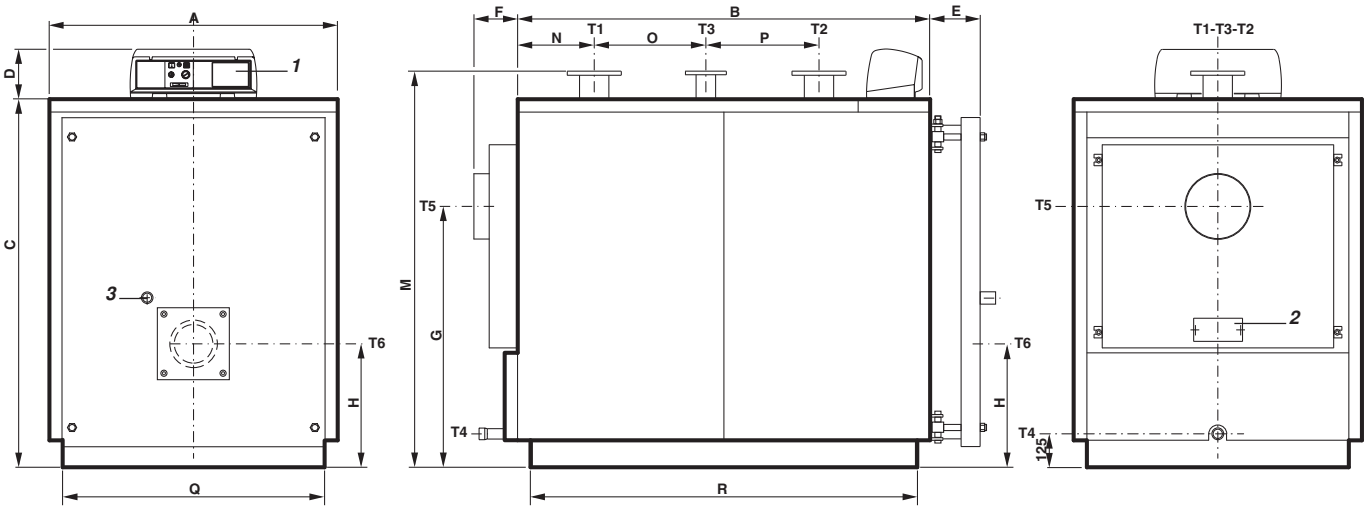

fig. 10

1 Panel board
2 Smoke chamber cleaning door
3 Flame sight glass

T1 C.H. flow
T2 C.H. return
T3 Expansion vessel connection

T4 Boiler drain
T5 Flue connection
T6 Max. burner blast tube dia.

TRIOPREX N	Output min/max	Input min/max	Boiler water content	Water side pressure drop (*)	Smoke side pressure drop	Maximum boiler working pressure	Weight with packaging	CONNECTIONS				
								T1 T2	**T3**	**T4**	**T5**	**T6**
Type	kW	kW	l	m w.c.	mm w.c.	bar	kg	UNI 2278 PN 16	UNI 2278 PN 16	ISO 7/1	Øi mm	Ø mm
TX N 840	714÷840	772÷915	932	0,35÷0,52	42÷58	5	1581	DN 100	DN 65	Rp 1¼	250	270

TRIOPREX N	DIMENSIONS													
	A	**B**	**C**	**D**	**E**	**F**	**G**	**H**	**M**	**N**	**O**	**P**	**Q**	**R**
Type	mm	mm	mm	mm	mm	mm	mm	mm	mm	mm	mm	mm	mm	mm
TX N 840	1122	2115	1432	190	195	195	1025	480	**1540**	298	945	440	**1020**	**2014**

(*) Hydraulic resistance for delta T 15K.

DETAIL FOR DOOR DRILLING
TX N 840

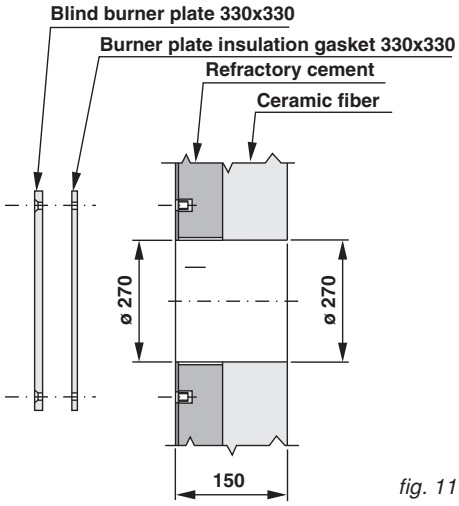

fig. 11

TRIOPREX-N 1100÷1900

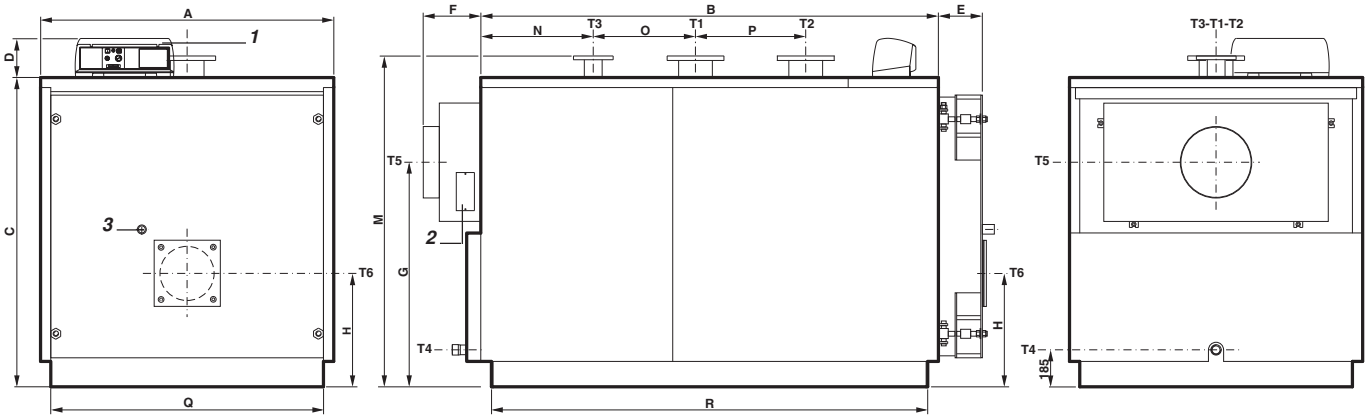

fig. 12

1 Panel board
2 Smoke chamber cleaning door
3 Flame sight glass

T1 C.H. flow
T2 C.H. return
T3 Expansion vessel connection

T4 Boiler drain
T5 Flue connection
T6 Max. burner blast tube dia.

TRIOPREX N	Output min/max	Input min/max	Boiler water content	Water side pressure drop (*)	Smoke side pressure drop	Maximum boiler working pressure	Weight with packaging	CONNECTIONS				
Type	kW	kW	l	m w.c.	mm w.c.	bar	kg	**T1 T2** UNI 2278 PN 16	**T3** UNI 2278 PN 16	**T4** ISO 7/1	**T5** Øi mm	**T6** Ø mm
TX N 1100	935÷1100	1012÷1198	1580	0,15÷0,21	45÷62	6	2444	DN 150	DN 80	Rp 1½	350	270
TX N 1320	1122÷1320	1214÷1438	1791	0,21÷0,30	61÷85	6	2965	DN 150	DN 80	Rp 1½	350	270
TX N 1600	1360÷1600	1470÷1743	2297	0,20÷0,28	40÷55	6	3685	DN 175	DN 100	Rp 1½	400	285
TX N 1900	1615÷1900	1745÷2070	2496	0,27÷0,39	52÷73	6	4089	DN 175	DN 100	Rp 1½	400	285

TRIOPREX N	DIMENSIONS													
Type	**A** mm	**B** mm	**C** mm	**D** mm	**E** mm	**F** mm	**G** mm	**H** mm	**M** mm	**N** mm	**O** mm	**P** mm	**Q** mm	**R** mm
TX N 1100	1462	2282	1542	190	230	290	1120	565	**1650**	561	510	550	**1360**	**2176**
TX N 1320	1462	2652	1542	190	230	290	1120	565	**1650**	561	880	550	**1360**	**2546**
TX N 1600	1622	2692	1702	190	260	290	1245	605	**1810**	661	670	700	**1520**	**2590**
TX N 1900	1622	3014	1702	190	260	290	1245	605	**1810**	662	990	700	**1520**	**2910**

(*) Hydraulic resistance for delta T 15K.

DETAIL FOR DOOR DRILLING TX N 1100 - 1320

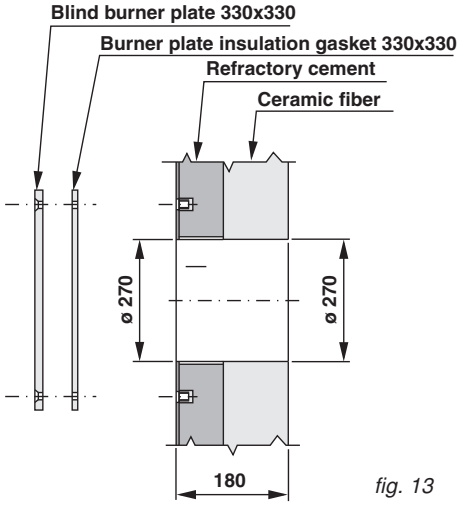

fig. 13

DETAIL FOR DOOR DRILLING TX N 1600 - 1900

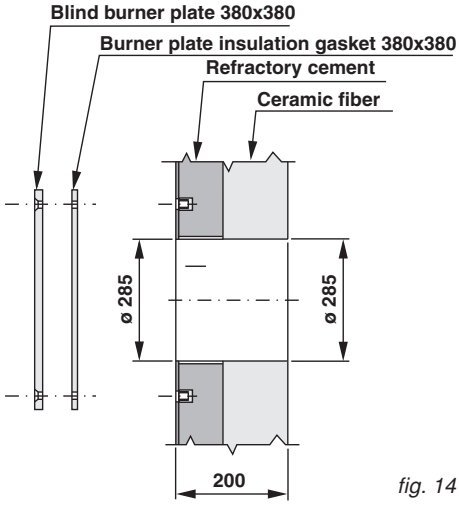

fig. 14